NORDIC®
SIMULATORS
Smart And Easy Learning

DISCOVER THE MOST INNOVATIVE SMART FURNITURE IN THE WORLD OF SIMULATION!

NORDIC MOVE

Simulation-based learning

Nordic Move

smart and easy learning

Nordic Move

Use Move for debriefing purposes only or as a full simulation recording system.

MOBILE RECORDING AND DEBRIEFING SYSTEM

Nordic Move – a complete simulation recording & debriefing system on wheels.

Move is the perfect solution for any situation where high-quality picture and sound are needed without the burden of heavy, fixed installations.

The stylish Nordic Move furniture runs lightly on its own wheels from room to room. The Nordic Move is a high-quality sound and video system with the speakers and a projector integrated and built in into the stylish furniture.

Move eliminates the need for permanently installed AV systems and is always ready for use at the touch of a button.

smart and remote learning

NORDIC MOVE

NORDIC MOVE R
Recording

Nordic Move R is a full-blooded simulation recording system. Nordic Move R makes any room a simulation training space.

The high-quality cameras connected to the system move along with the furniture and can be wirelessly installed in the chosen space. The built-in debriefing feature can be used anywhere.

Roll the Move R in the room, press start, record, and analyze.

Both Move R and Move D can be used as a general AV-system as well.

smart and remote learning

NORDIC MOVE D
Debriefing

Nordic Move D is a debriefing unit without the cameras and recording capabilities.

Implement your debriefing-session with ease anywhere, anytime.

Roll the Move D into place next to an appropriate wall, press start, display, and analyze.

NORDIC MOVE

THE EASIEST SOLUTION FOR PRESENTING

smart and remote learning

Traditional single room AV plan

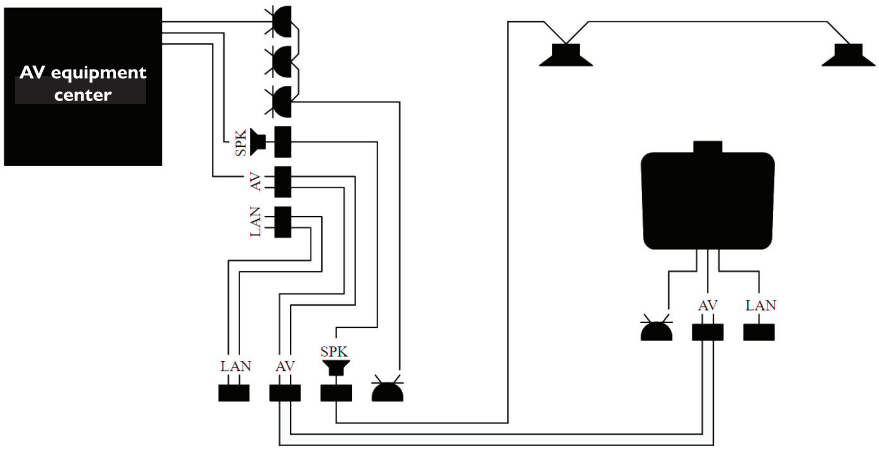

The same with Nordic Move

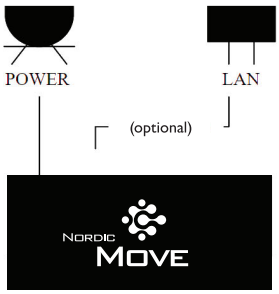

NORDIC MOVE

Analytical	Basic	Passive
Viewing distance	Viewing distance	Viewing distance
4x	**6x**	**8x**
Image height	Image height	Image height
optimal for analytical viewing	for basic presentations	for passive viewing - movies and videos

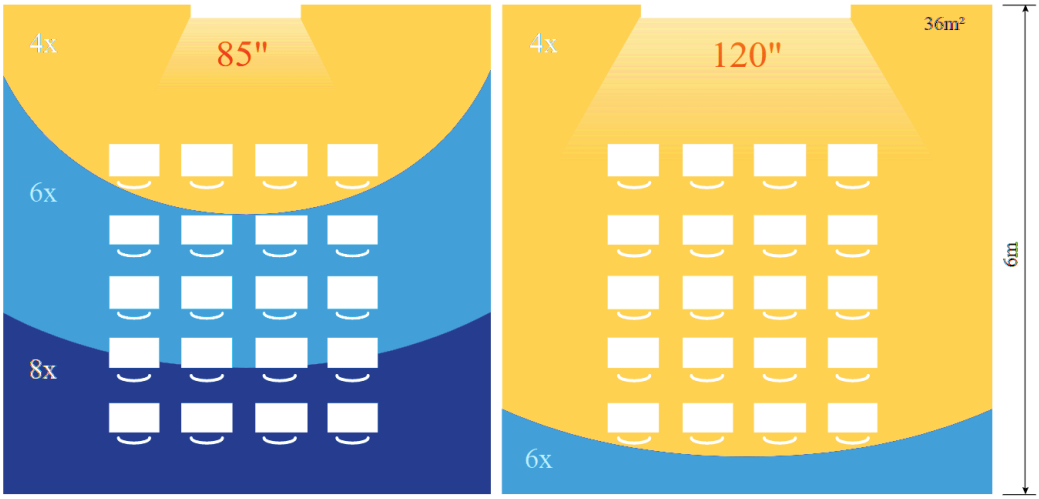

smart and easy learning

NORDIC® SIMULATORS
Smart And Easy Learning

NORDIC SIMULATORS
Smart And Easy Learning

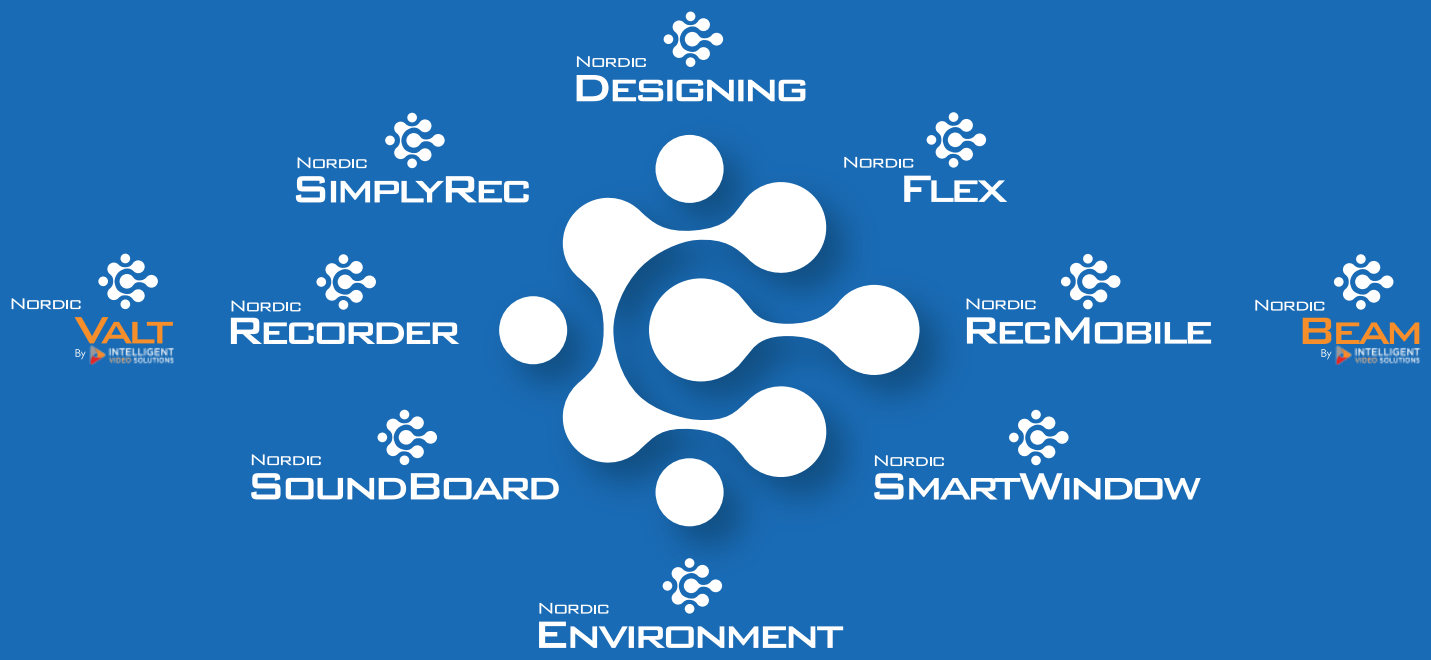

smart and easy learning

Nordic Simulators Oy
Vuoripojankatu 16,
FI-15210 Lahti, Finland
tel: +358 3 5898588
office@nordicsimulators.fi
https://www.nordicsimulators.com